HYDRAPRO

SPEC SHEET: **HPVSCVBP12LF.1221**

SPECIFICATION SUBMITTAL SHEET

LARGE FLANGE SILLCOCK WITH VACUUM BREAKER

Part #	Model #	Description (Size)	Inner Carton Qty	Master Carton Qty	Select Model Below
LARGE FLANGE SILLCOCK with F1807 PEX INLET (LEAD FREE)*					
H51420	HPVSCVBP12LF	1/2" F1807 PEX x 3/4" MHT LARGE FLANGE SILLCOK WITH VACUUM BREAKER	10	100	☐

LEAD FREE

- Multi-Turn
- Lead-Free
- 3/4" MHT Outlet
- Includes Vacuum Breaker

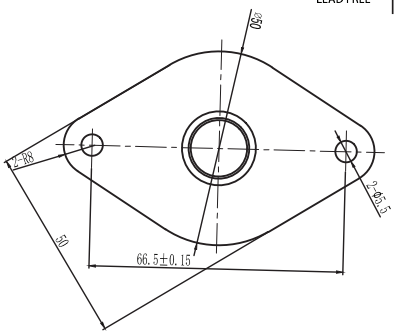

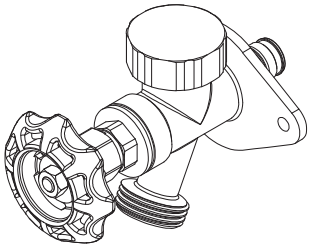

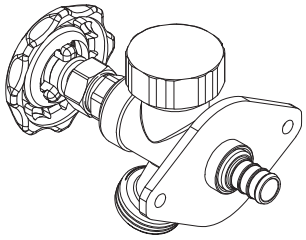

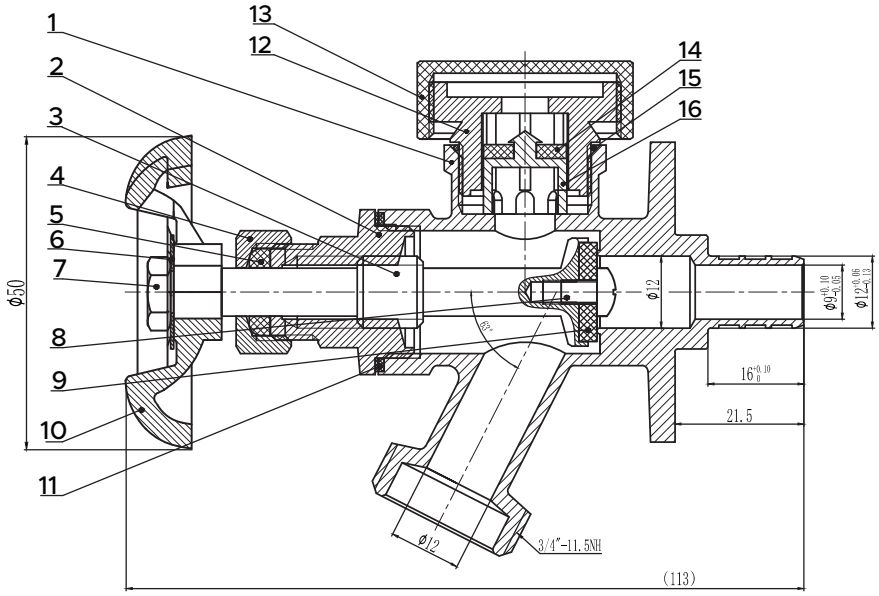

NO.	PART	MATERIAL
1	Body	Lead-Free Brass
2	Nut	Lead-Free Brass
3	Stem	Lead-Free Brass
4	Nut	Brass
5	Packing	PTFE
6	Nameplate	Aluminum Alloy

NO.	PART	MATERIAL
7	Handle Nut	Stainless Steel
8	Screw	Lead-Free Brass
9	Packing	PTFE
10	Handle	Cast Iron
11	Washer	PTFE
12	Piston Cover	PE

NO.	PART	MATERIAL
13	Dust Cover	PE
14	Washer	EPDM
15	O-Ring	NBR
16	Piston	PE

JOB NAME:

JOB LOCATION:

CONTRACTOR: **DATE:** **ITEM TAG:**

ENGINEER APPROVAL: **DATE:** **PART NUMBER:**

www.hydrapro.biz | (800) 849-4844 | Fax (877) 249-8435

Atlanta (GA) • Dallas (TX) • Houston (TX) • Pompano Beach (FL) • Jackson (MI)